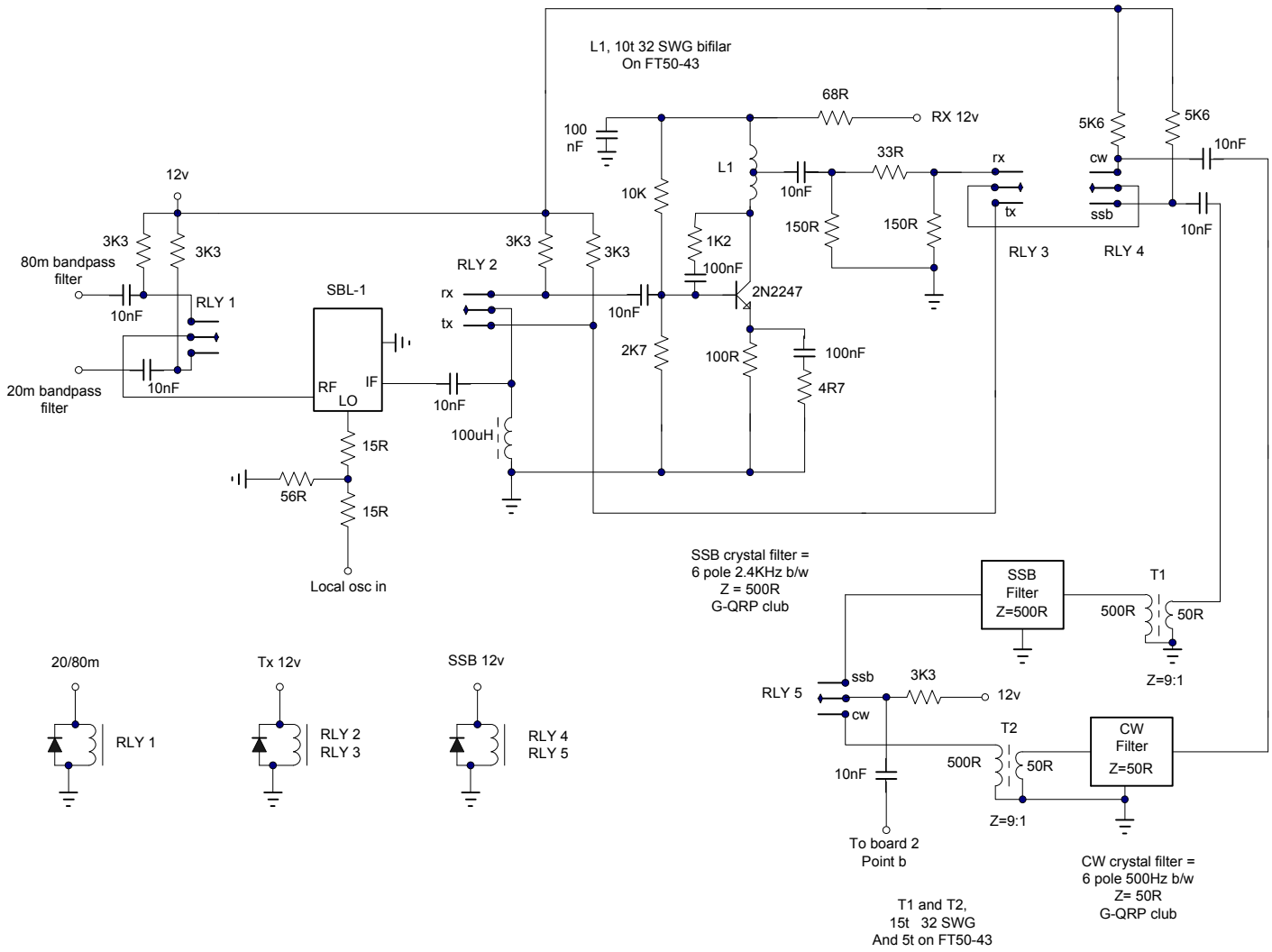
L1, 10t 32 SWG bifilar
On FT50-43
68R
RX 12v
100
nF
5K6
5K6
10nF
33R
rx
cw
L1
10nF
10K
tx
ssb
10nF
12v
150R
150R
3K3
3K3
3K3
3K3
1K2
RLY 3
RLY 4
80m bandpass
filter
RLY 2
100nF
SBL-1
rx
2N2247
RLY 1
10nF
tx
10nF
2K7
100R
100nF
20m bandpass
filter
10nF
RF
IF
LO
10nF
4R7
100uH
15R
56R
15R
Local osc in
SSB crystal filter =
6 pole 2.4KHz b/w
Z = 500R
G-QRP club
SSB
Filter
Z=500R
T1
500R
50R
Z=9:1
20/80m
Tx 12v
SSB 12v
ssb
3K3
RLY 5
12v
cw
RLY 1
RLY 2
RLY 3
RLY 4
RLY 5
T2
CW
Filter
Z=50R
500R
50R
10nF
Z=9:1
To board 2
Point b
CW crystal filter =
6 pole 500Hz b/w
Z= 50R
G-QRP club
T1 and T2,
15t 32 SWG
And 5t on FT50-43