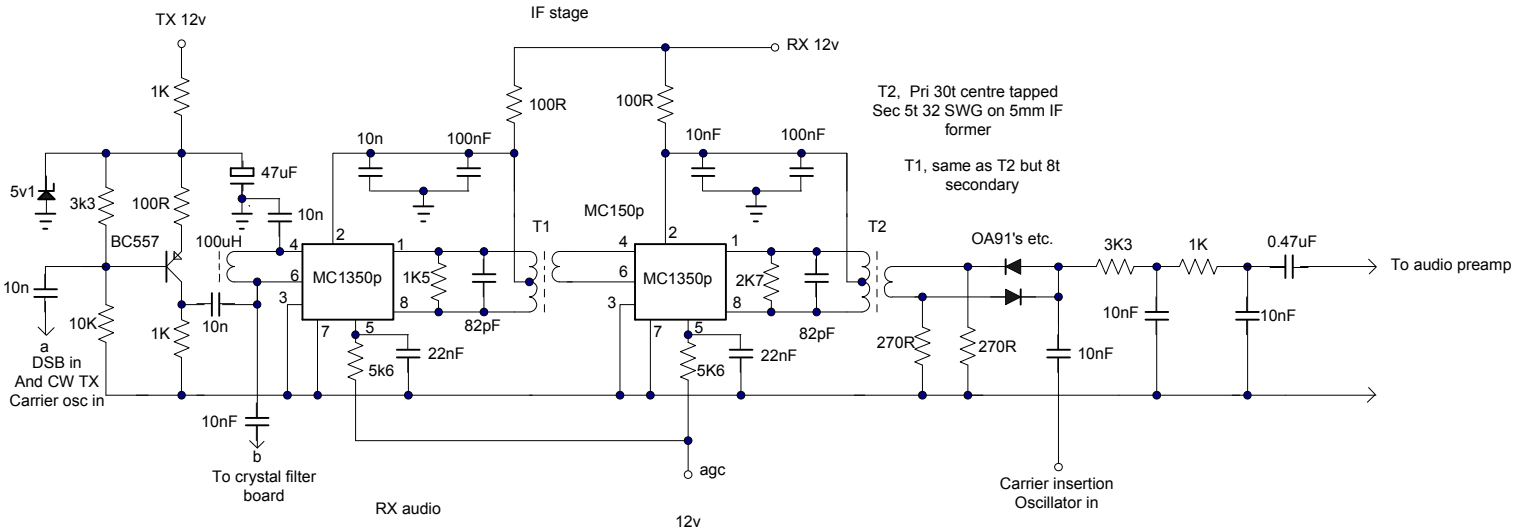
TX 12v
IF stage
RX 12v
1K
100R
100R
T2, Pri 30t centre tapped
Sec 5t 32 SWG on 5mm IF
former
T1, same as T2 but 8t
secondary
10n
100nF
10nF
100nF
47uF
5v1
3k3
100R
10n
MC150p
BC557
100uH
T1
T2
OA91's etc.
3K3
1K
0.47uF
To audio preamp
MC1350p
MC1350p
1K5
2K7
10n
10K
1K
10n
82pF
82pF
10nF
10nF
270R
270R
10nF
22nF
22nF
5k6
5K6
a
DSB in
And CW TX
Carrier osc in
10nF
b
To crystal filter
board
agc
Carrier insertion
Oscillator in

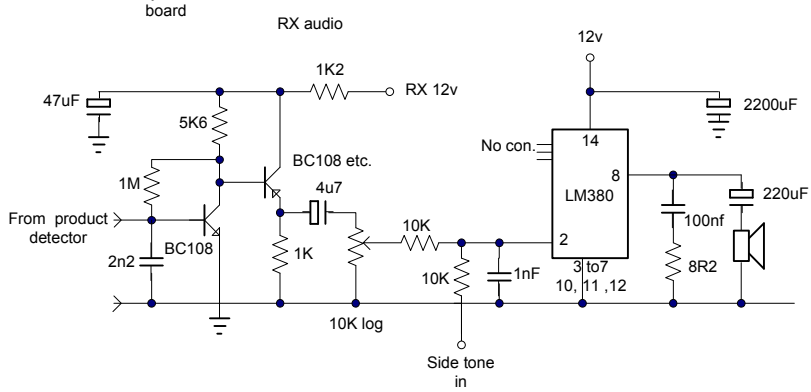
RX audio
12v
1K2
RX 12v
47uF
5K6
2200uF
No con.
14
BC108 etc.
8
LM380
1M
4u7
220uF
From product
detector
10K
100nf
BC108
2n2
1K
3 to7
10, 11 ,12
8R2
10K
1nF
10K log
Side tone
in

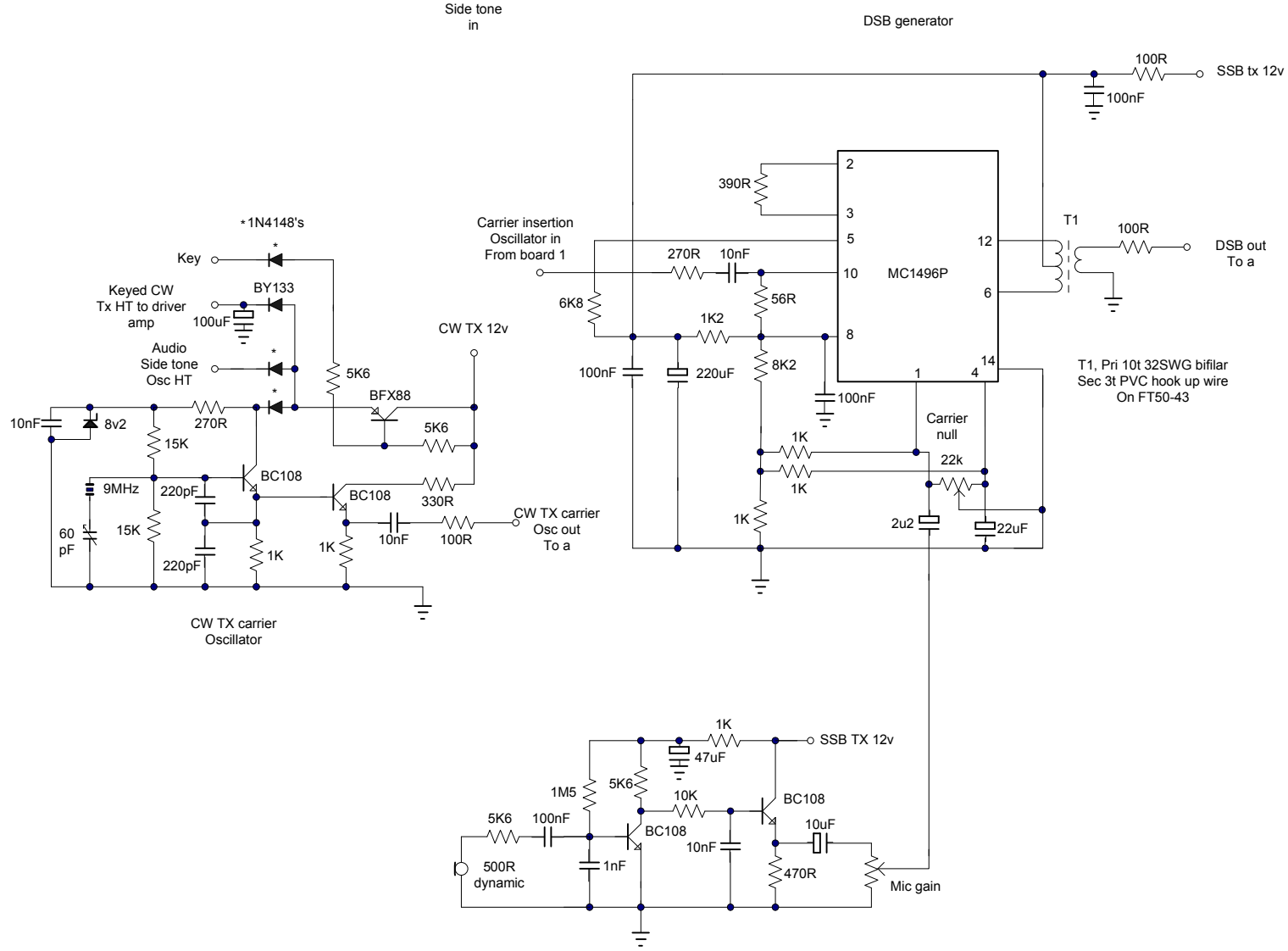
DSB generator
100R
SSB tx 12v
100nF
390R
*1N4148's
Carrier insertion
Oscillator in
From board 1
T1
100R
DSB out
To a
Key
270R
10nF
MC1496P
Keyed CW
Tx HT to driver
amp
BY133
100uF
6K8
56R
1K2
CW TX 12v
Audio
Side tone
Osc HT
5K6
100nF
220uF
8K2
BFX88
T1, Pri 10t 32SWG bifilar
Sec 3t PVC hook up wire
On FT50-43
10nF
8v2
270R
5K6
100nF
Carrier
null
15K
1K
22k
9MHz
220pF
BC108
BC108
330R
1K
60
pF
15K
10nF
100R
CW TX carrier
Osc out
To a
2u2
22uF
220pF
1K
1K
CW TX carrier
Oscillator
1K
SSB TX 12v
47uF
1M5
5K6
10K
BC108
5K6
100nF
BC108
10uF
10nF
500R
dynamic
1nF
470R
Mic gain