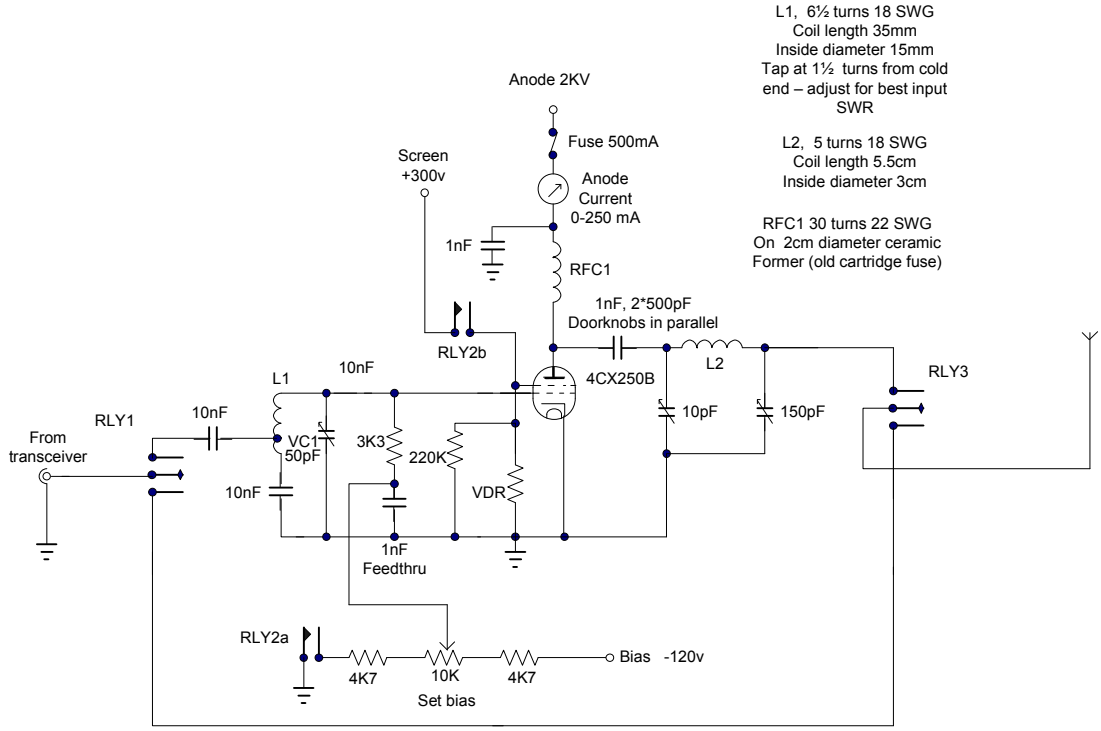
L1, 6½ turns 18 SWG
Coil length 35mm
Inside diameter 15mm
Tap at 1½ turns from cold end – adjust for best input SWR
L2, 5 turns 18 SWG
Coil length 5.5cm
Inside diameter 3cm
RFC1 30 turns 22 SWG
On 2cm diameter ceramic
Former (old cartridge fuse)
Anode 2KV
Fuse 500mA
Anode Current 0-250 mA
Screen +300v
1nF
RFC1
1nF, 2*500pF
Doorknobs in parallel
RLY2b
L1
10nF
4CX250B
L2
RLY3
RLY1
10nF
From transceiver
VC1 50pF
3K3
220K
10pF
150pF
10nF
VDR
1nF Feedthru
RLY2a
4K7
10K
4K7
Bias -120v
Set bias

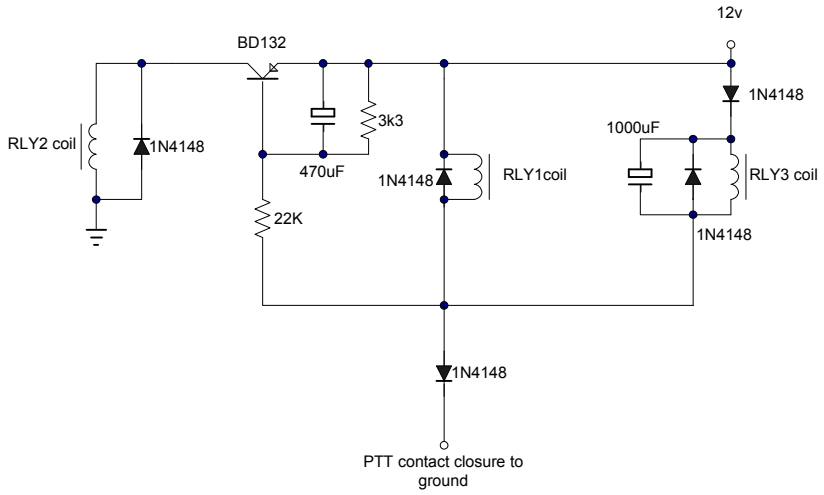
12v
BD132
1N4148
3k3
RLY2 coil
1N4148
470uF
1N4148
RLY1coil
1000uF
RLY3 coil
22K
1N4148
1N4148
PTT contact closure to ground