M0DGQ

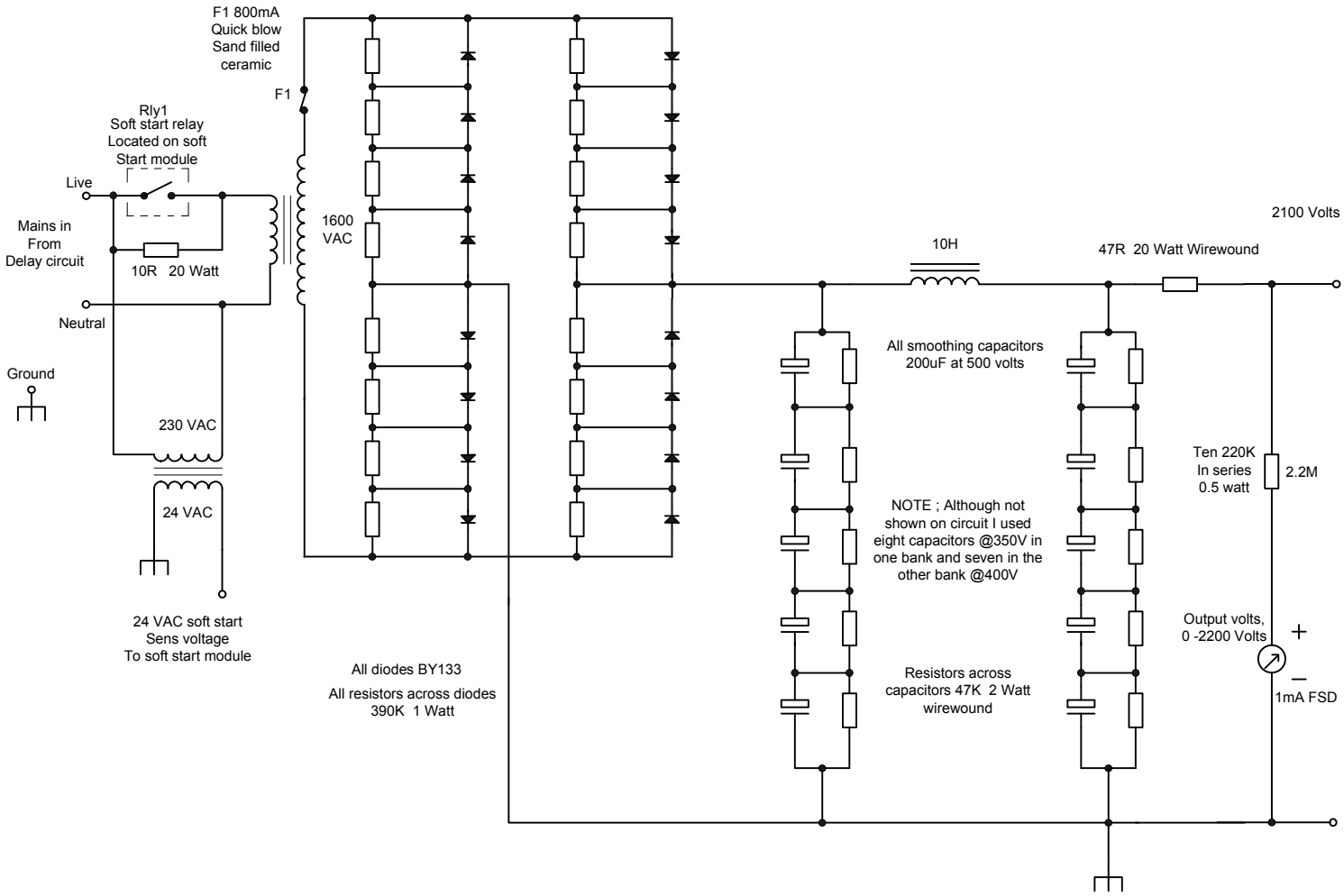
F1 800mA
Quick blow
Sand filled
ceramic
F1
Rly1
Soft start relay
Located on soft
Start module
Live
Mains in
From
Delay circuit
10R 20 Watt
Neutral
Ground
230 VAC
24 VAC
24 VAC soft start
Sens voltage
To soft start module
1600
VAC
All diodes BY133
All resistors across diodes
390K 1 Watt
10H
47R 20 Watt Wirewound
2100 Volts
All smoothing capacitors
200uF at 500 volts
NOTE ; Although not
shown on circuit I used
eight capacitors @350V in
one bank and seven in the
other bank @400V
Resistors across
capacitors 47K 2 Watt
wirewound
Ten 220K
In series
0.5 watt
2.2M
Output volts,
0 -2200 Volts
+
–
1mA FSD

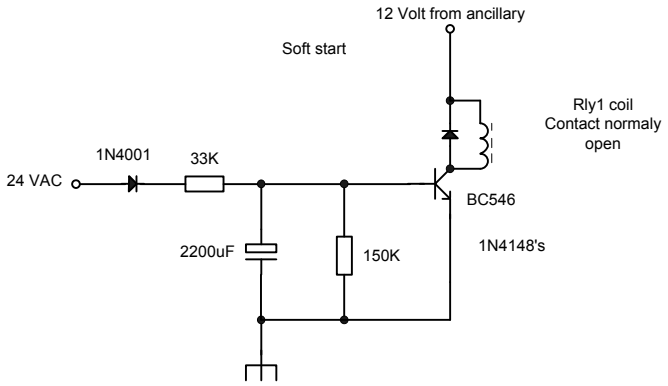
12 Volt from ancillary
Soft start
Rly1 coil
Contact normaly
open
1N4001
33K
24 VAC
BC546
2200uF
150K
1N4148's