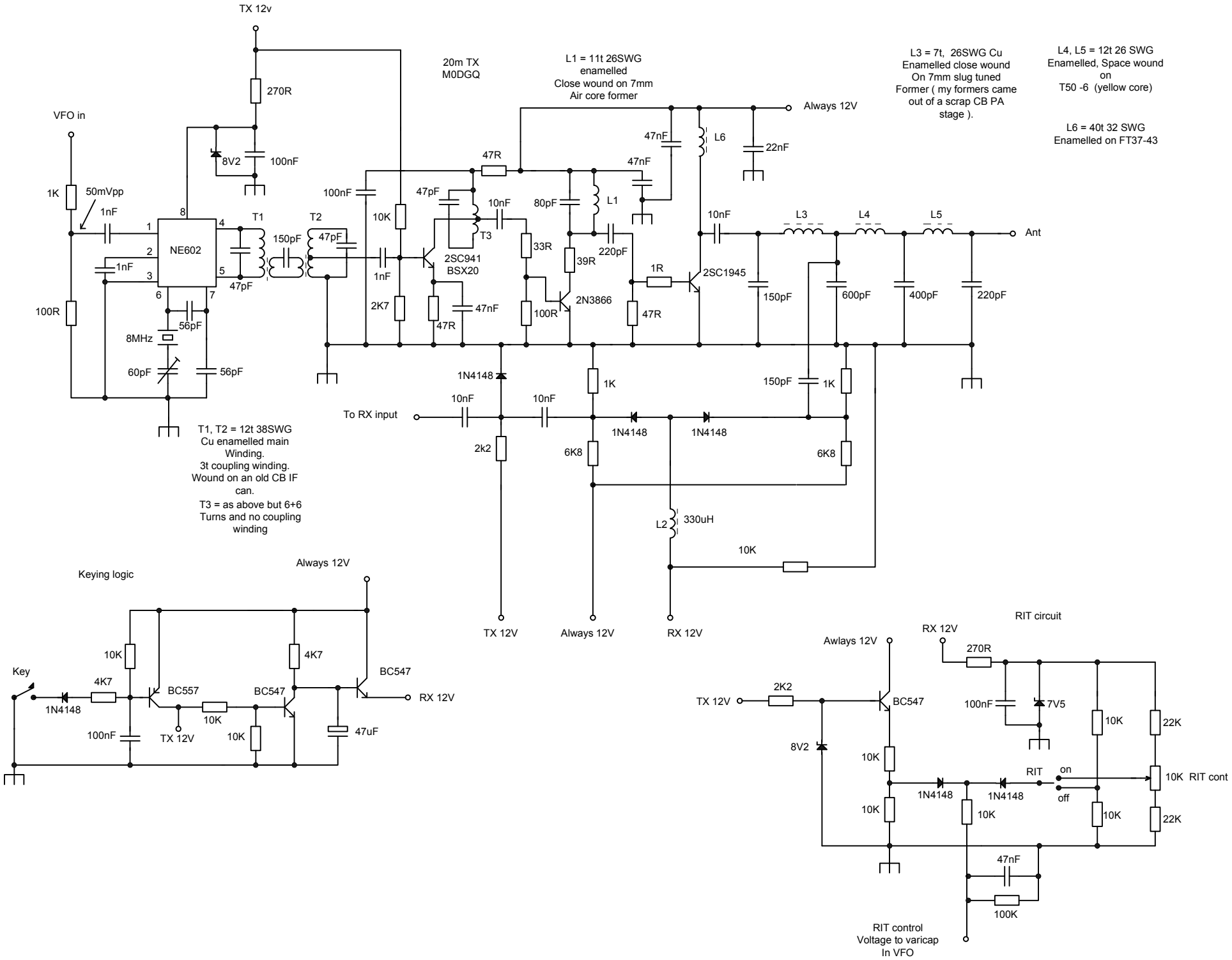
20m TX
M0DGQ
TX 12v
VFO in
1K
50mVpp
1nF
NE602
100R
8MHz
60pF
56pF
270R
8V2
100nF
T1
T2
150pF
47pF
100nF
10K
2K7
1nF
47pF
2SC941
BSX20
T3
47R
47nF
10nF
33R
100R
80pF
L1
39R
220pF
2N3866
L1 = 11t 26SWG
enamelled
Close wound on 7mm
Air core former
Always 12V
47nF
L6
22nF
1R
2SC1945
47R
10nF
150pF
L3
L4
L5
600pF
400pF
220pF
Ant
L3 = 7t, 26SWG Cu
Enamelled close wound
On 7mm slug tuned
Former (my formers came
out of a scrap CB PA
stage).
L4, L5 = 12t 26 SWG
Enamelled, Space wound
on
T50 -6 (yellow core)
L6 = 40t 32 SWG
Enamelled on FT37-43
1N4148
10nF
To RX input
2k2
6K8
1K
1N4148
1N4148
150pF
1K
6K8
L2
330uH
10K
TX 12V
Always 12V
RX 12V
T1, T2 = 12t 38SWG
Cu enamelled main
Winding.
3t coupling winding.
Wound on an old CB IF
can.
T3 = as above but 6+6
Turns and no coupling
winding
Keying logic
Always 12V
Key
1N4148
4K7
10K
BC557
100nF
TX 12V
10K
BC547
10K
4K7
BC547
47uF
RX 12V
RIT circuit
RX 12V
Awlays 12V
270R
TX 12V
2K2
BC547
100nF
7V5
8V2
10K
10K
1N4148
1N4148
RIT
on
off
10K
10K
10K
22K
10K RIT cont
10K
22K
47nF
100K
RIT control
Voltage to varicap
In VFO